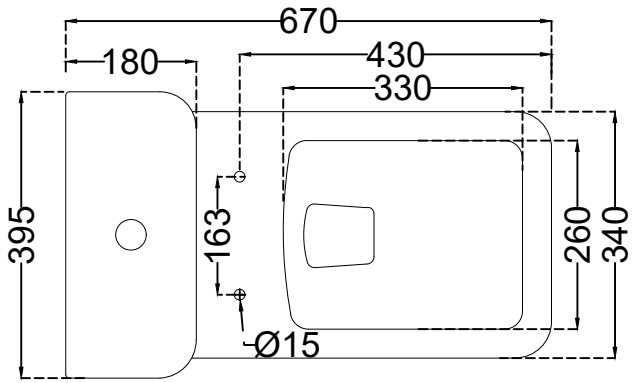

TOP VIEW

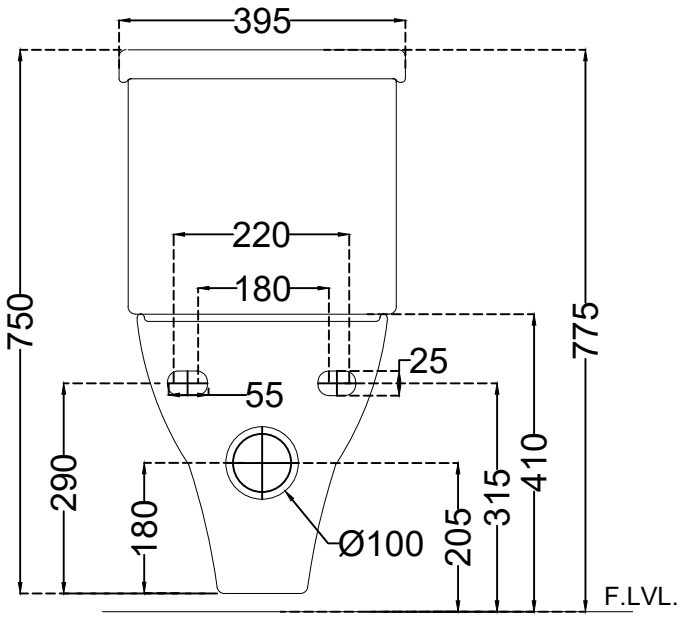

BACK VIEW

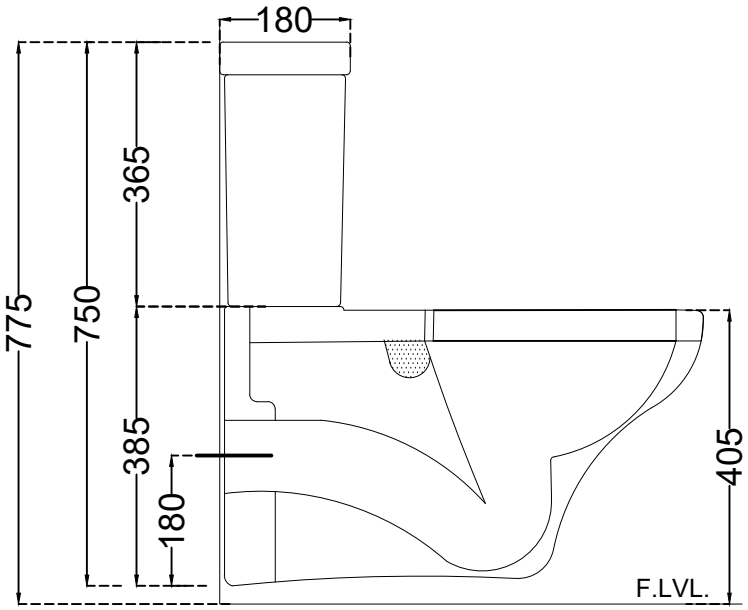

SIDE VIEW

ESSCO BY Jaquar GROUP

Jaquar Group

Global Headquarters
Plot No. 3, Sector- M-11, IMT Manesar
Gurgaon, NCR - 122050, India
E-mail : **Sales: support@jaquar.com**
Customer Service : **service@jaquar.com**

ITEM CODE	AIS-WHT-101351SPPSMZ
ITEM TYPE	EXTENDED WALL HUNG WC
ITEM SIZE	395x670x750 mm

ALL DIMENSIONS ARE IN MM. (TOLERANCE ± 5 MM)