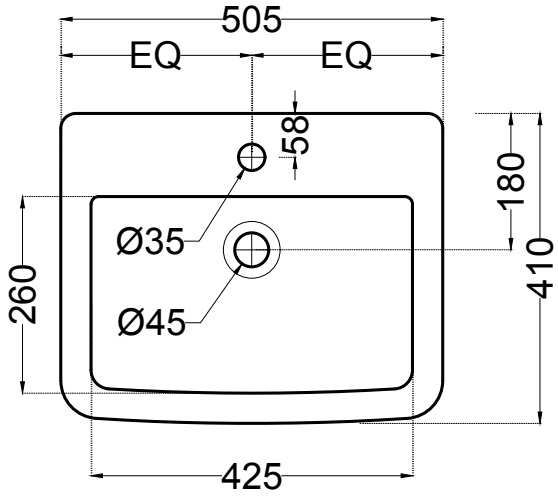

TOP VIEW

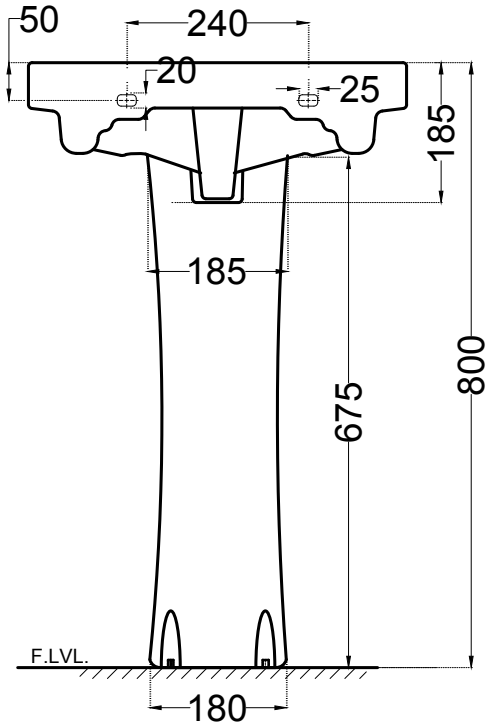

BACK VIEW

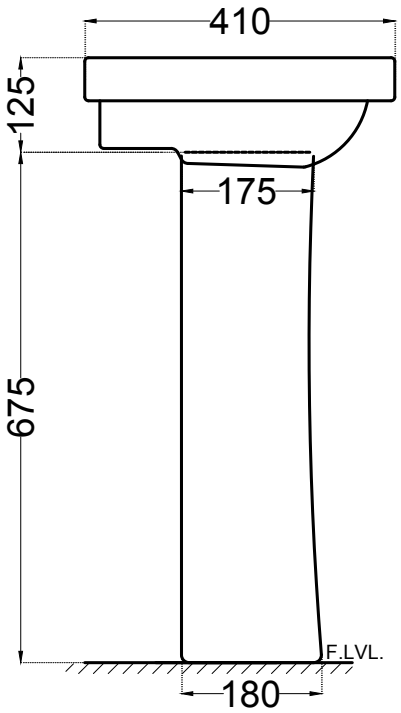

SIDE VIEW

ESSCO BY Jaquar GROUP

Jaquar Group
Global Headquarters
Plot No. 3, Sector– M–11, IMT Manesar
Gurgaon, NCR – 122050, India
E–mail : Sales: support@jaquar.com
Customer Service : service@jaquar.com

ITEM CODE	AIS-WHT-101801+AIS-WHT-101301
ITEM TYPE	WALL HUNG BASIN WITH FULL PEDESTAL
ITEM SIZE	505x410x185 mm With pedestal hight 800 mm

ALL DIMENSIONS ARE IN MM. (TOLERANCE ± 5 MM)