ÉSSCO BY Jaquar GROUP

ORIAN



Orian



ORI-CHR-109011B

Single Lever Basin Mixer

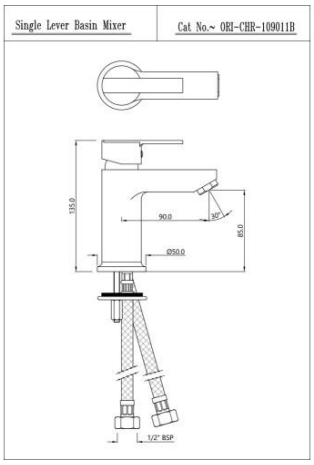



ORI-CHR-109051B

Single Lever Basin Mixer

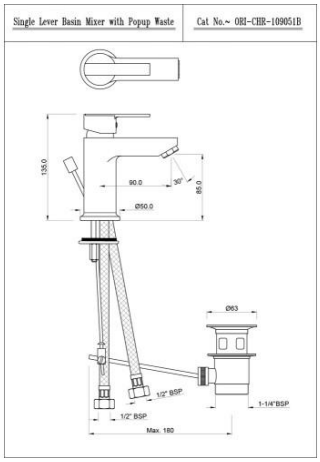



ORI-CHR-109005B

Single Lever Tall Boy

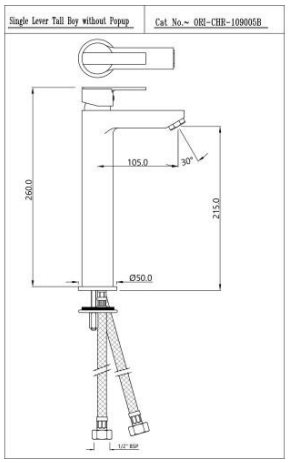



ORI-CHR-109055K

Exposed Parts Kit of Single Lever Diverter

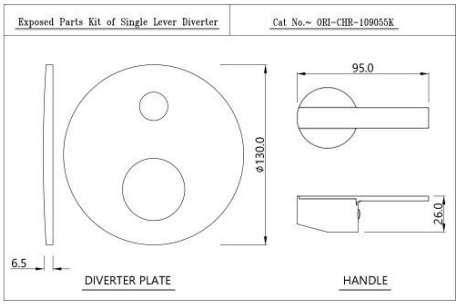



ORI-CHR-109119

Single Lever Wall Mixer

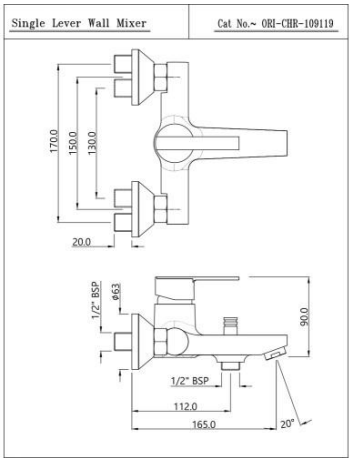



ORI-CHR-109219

Wall Mixer Non-Telephonic Shower Arrangement

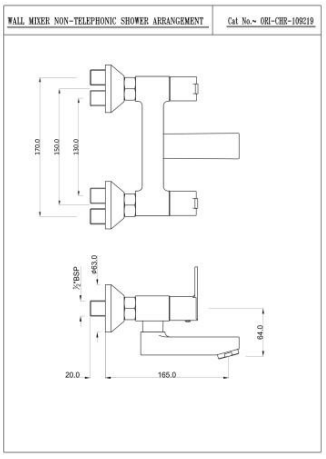



ORI-CHR-109149

Single Lever Exposed Shower Mixer

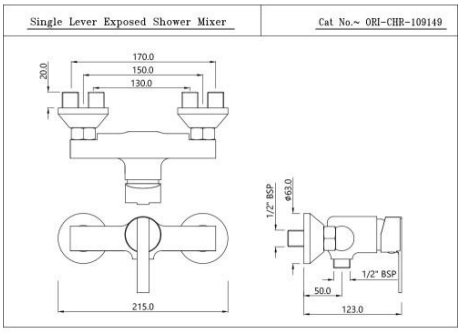



ORI-CHR-109213B

Single Lever 1-Hole Bidet Mixer

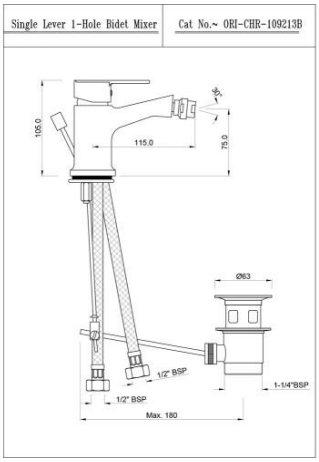



ORI-CHR-109001

Pillar Cock

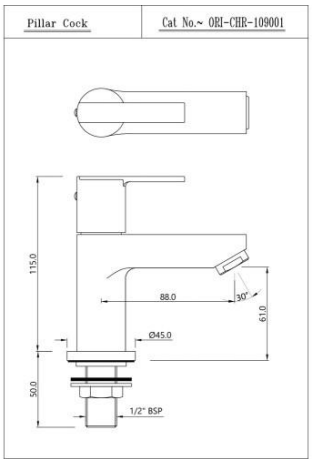

Orian



ORI-CHR-109021

Pillar Cock

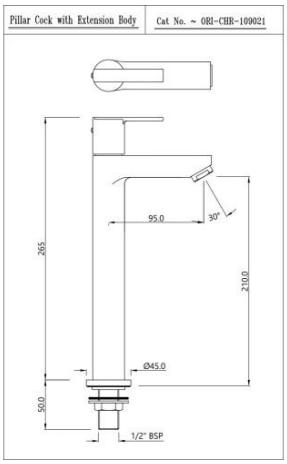



ORI-CHR-109123

Swan Neck Tap

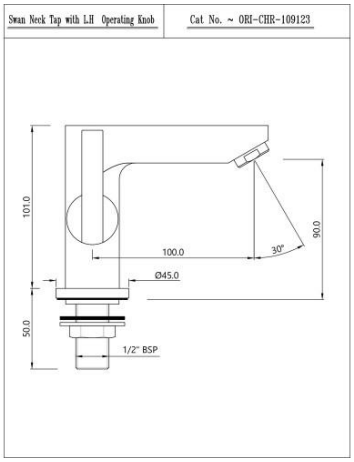



ORI-CHR-109127

Swan Neck Tap

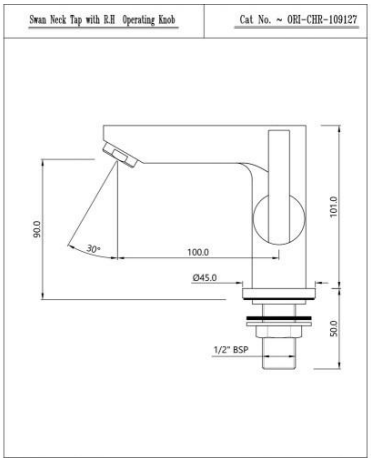



ORI-CHR-109273

Wall Mixer

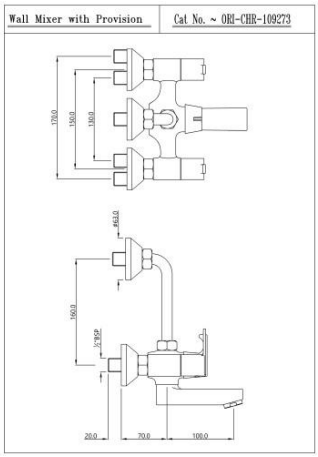



ORI-CHR-109281

Wall Mixer

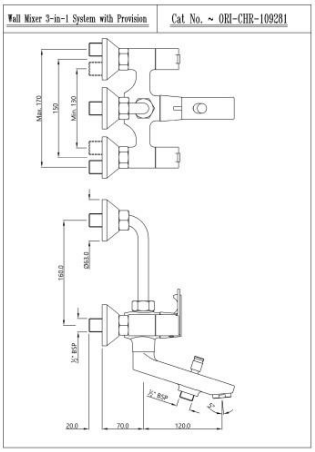



ORI-CHR-109179B

Side Single Lever Sink Mixer

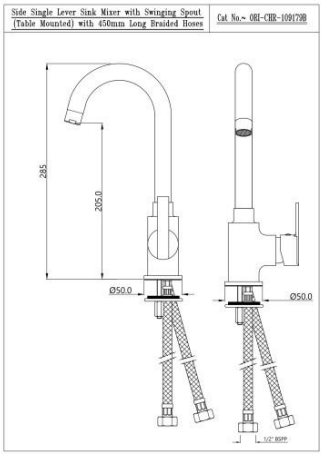

Orian



ORI-CHR-109309

Sink Mixer

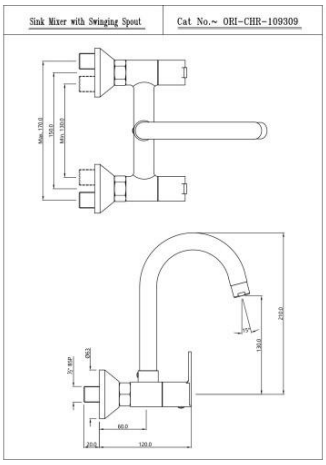



ORI-CHR-109347

Sink Cock

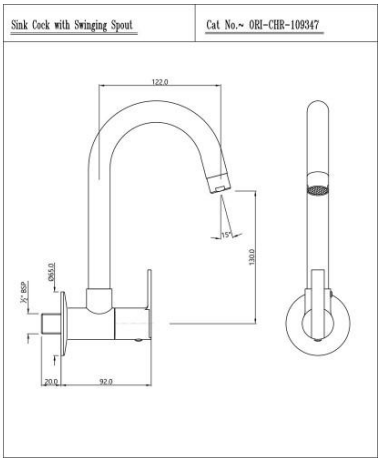



ORI-CHR-109357

Sink Cock

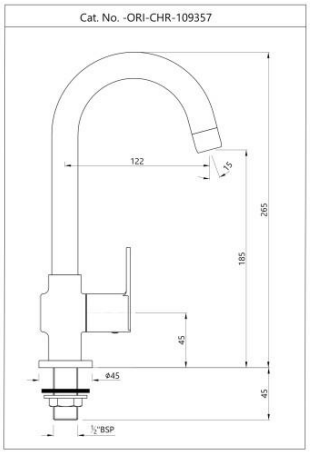



ORI-CHR-109037

Bib Cock

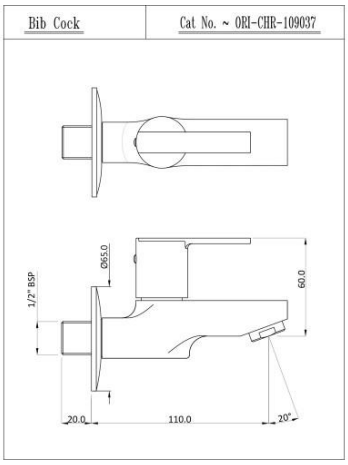



ORI-CHR-109041

2-Way Bib Cock

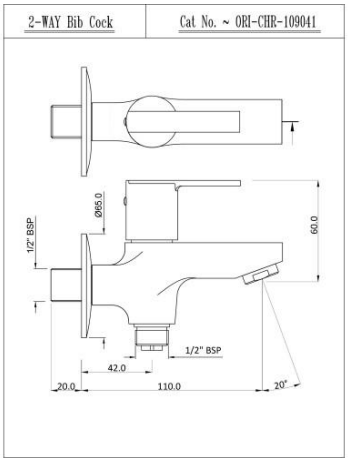



ORI-CHR-109053

Angular Stop Cock

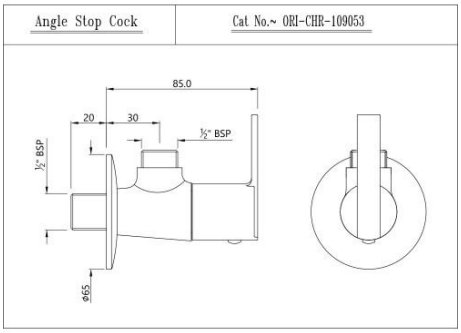



ORI-CHR-109067

2-Way Angular Stop Cock

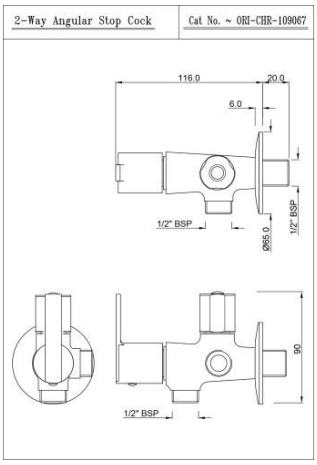



ORI-CHR-109057

Angular Stop Cock

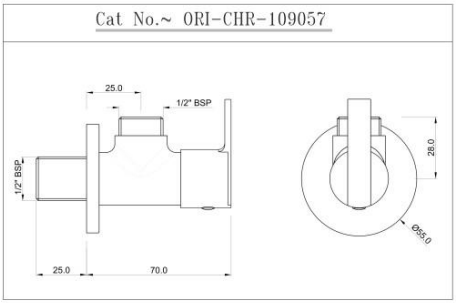



ORI-CHR-109069K

Exposed part kit of Concealed Stop Cock

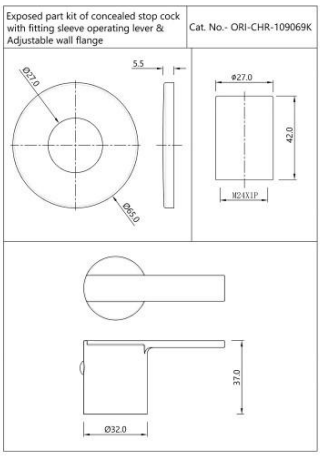

Orian



ORI-CHR-109081

Flush Cock

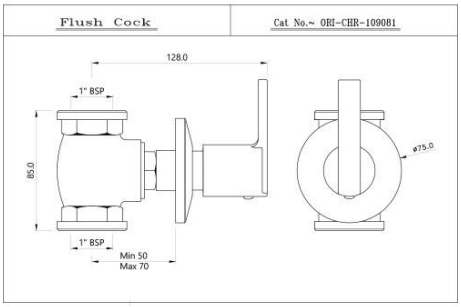



SPE-CHR-109429

Orian Bath Tub Spout

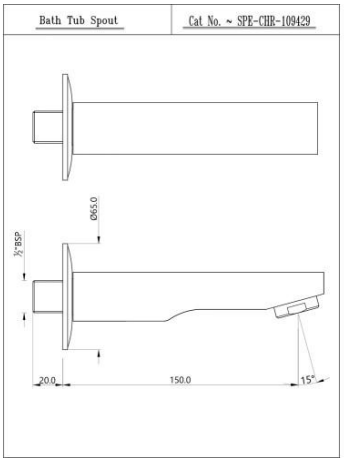



SPE-CHR-109463

Orian Bath Tub Spout

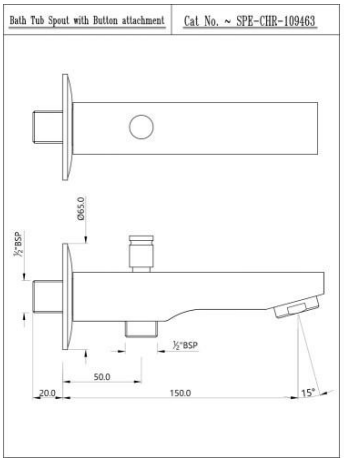

Orian



ORI-CHR-109233K

Exposed Part Kit of Single Lever Basin Mixer Wall Mounted

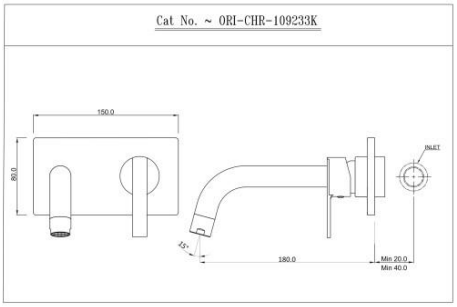

Disclaimer

- Jaquar reserves the right at its sole discretion, to change/modify/alter any product specification at any time without notice, where improvement can be effected in design, development and dimensions.
- Although the information shown in this catalogue is updated to the extent possible but the same may vary. It is advisable to consult our local representative or check in a period manner for latest technical and other updates.
- The prices are subject to change without notice and those ruling at the time of supply will be charged.
- Colours &sizes of product images shown in the Website may vary in reality