STELLA



Stella



STE-CHR-107011B

Single Lever Basin Mixer

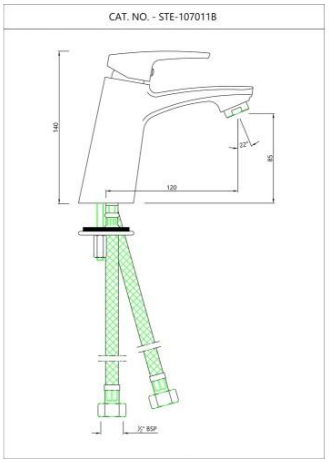



STE-CHR-107219

Wall Mixer Non-Telephonic Shower Arrangement

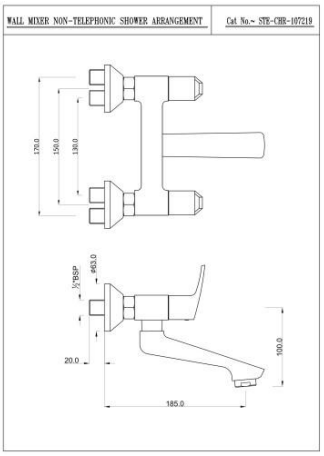



STE-CHR-107051B

Single Lever Basin Mixer with Popup Waste

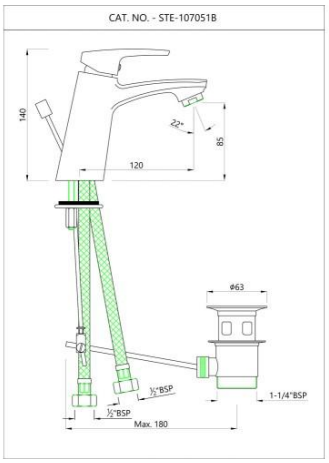

Stella



STE-CHR-107005B

Single Lever Tall Boy

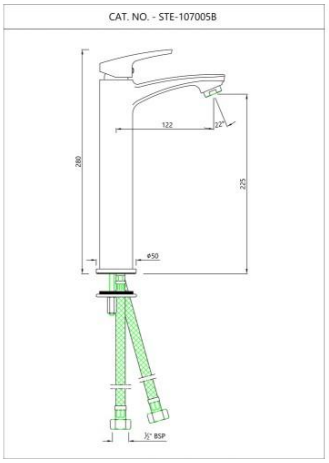



STE-CHR-107055K

Exposed Parts Kit of Single Lever Divertor

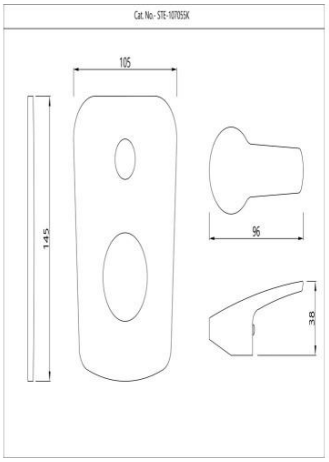



STE-CHR-107119

Single Lever Wall Mixer

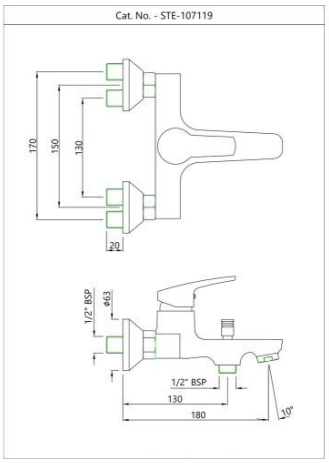

Stella



STE-CHR-107149

Single Lever Exposed Shower Mixer

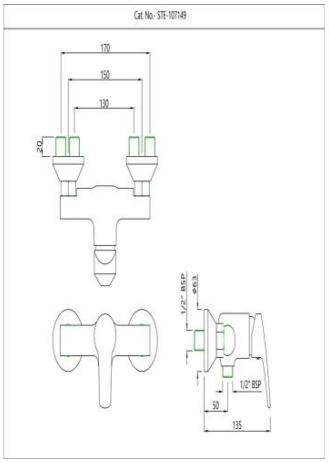



STE-CHR-107213B

Single Lever 1-Hole Bidet Mixer with Popup Waste System

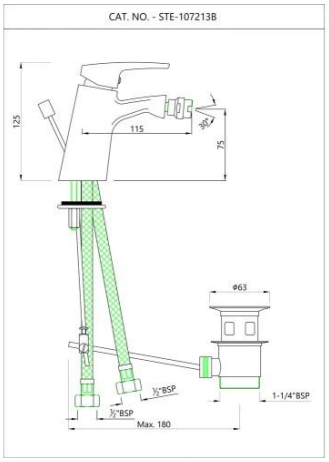



STE-CHR-107001

Pillar Cock

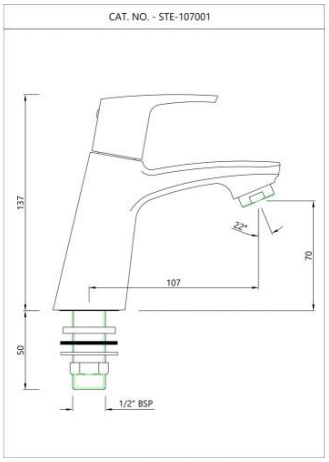

Stella



STE-CHR-107021

Pillar Cock

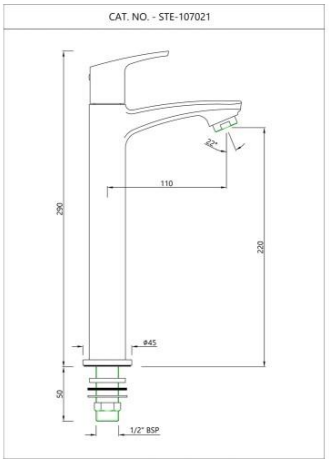



STE-CHR-107233K

Exposed Part Kit of Single Lever Basin Mixer Wall Mounted

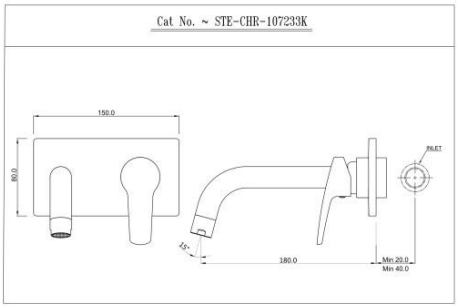



STE-CHR-107123

Swan Neck Tap

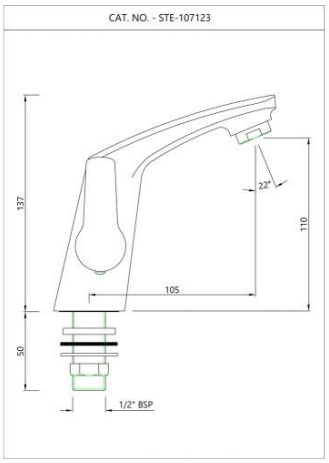

Stella



STE-CHR-107127

Swan Neck Tap

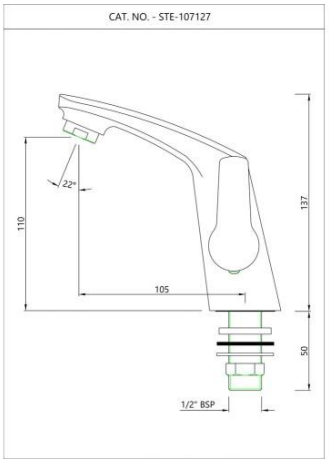



STE-CHR-107273

Wall Mixer

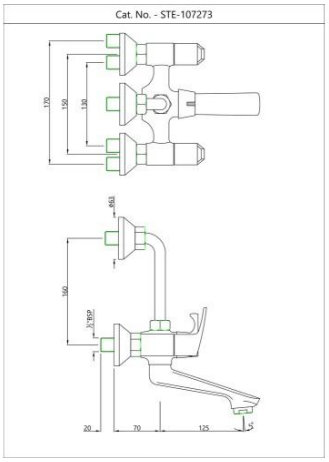



STE-CHR-107281

Wall Mixer 3-in-1 System

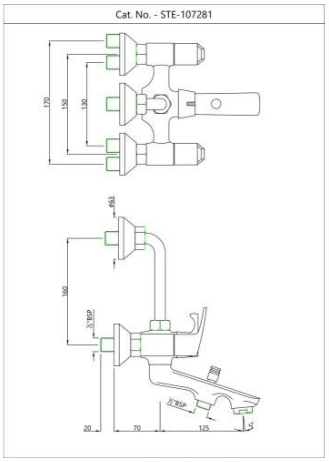



STE-CHR-107309

Sink Mixer

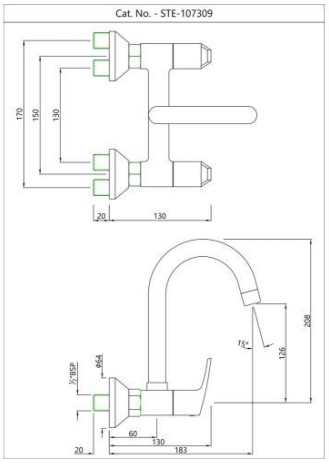



STE-CHR-107347

Sink Cock

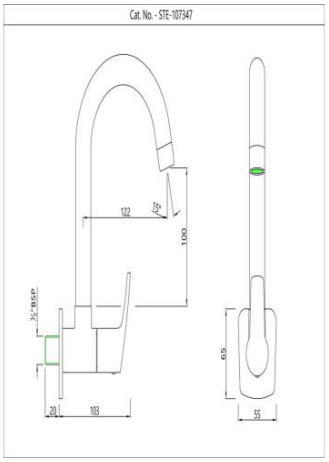



STE-CHR-107357

Sink Cock

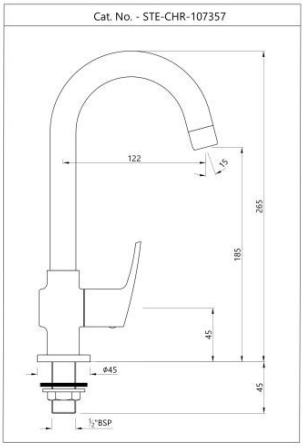



STE-CHR-107037

Bib Cock

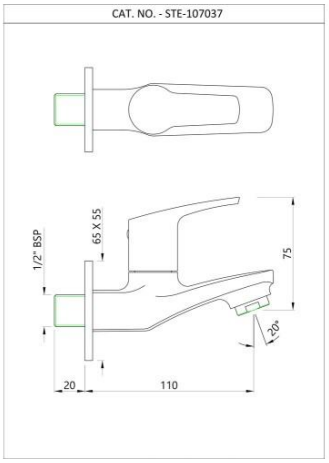



STE-CHR-107041

2-Way Bib Cock

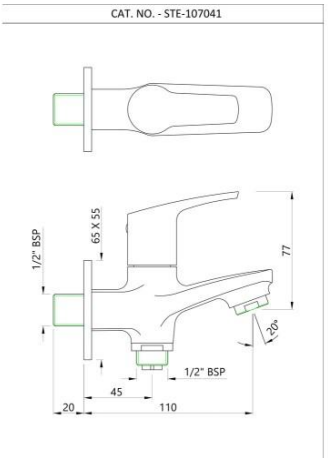



STE-CHR-107107

Long Body Bib Cock

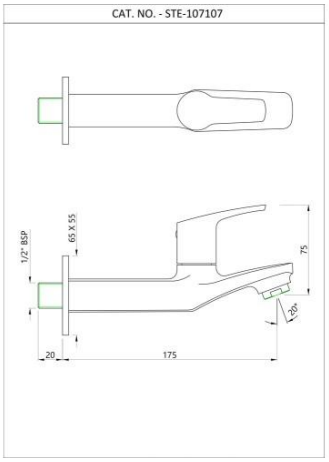



STE-CHR-107053

Angular Stop Cock

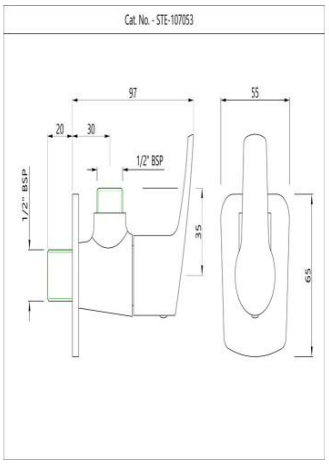



STE-CHR-107067

2-Way Angular Stop Cock

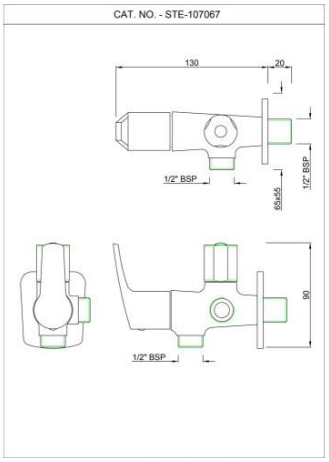



STE-CHR-107057

Angular Stop Cock

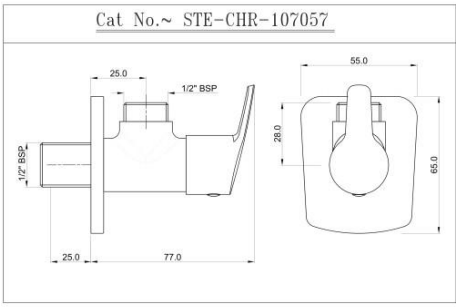

Stella



STE-CHR-107069K

Exposed part kit of Concealed Stop Cock

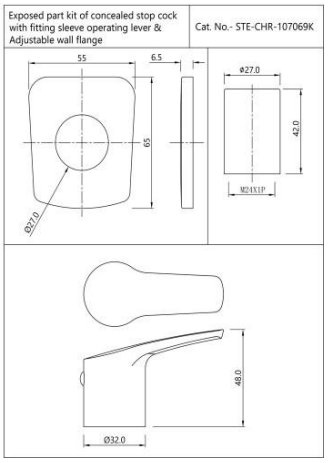



STE-CHR-107081

Flush Cock

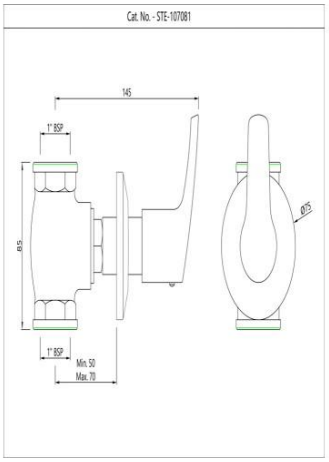



SPE-CHR-107429

Stella Bath Tub Spout

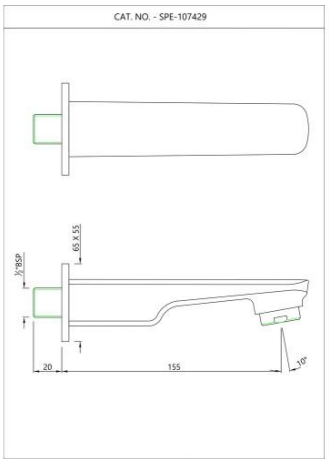

Stella



SPE-CHR-107463

Stella Bath Tub Spout

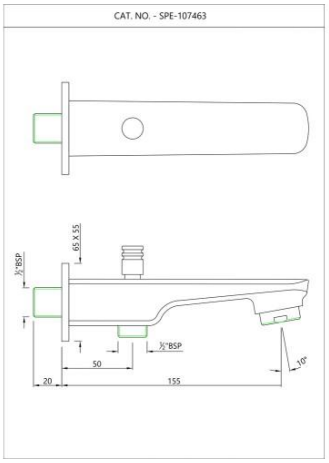

Disclaimer

- Jaquar reserves the right at its sole discretion, to change/modify/alter any product specification at any time without notice, where improvement can be effected in design, development and dimensions.
- Although the information shown in this catalogue is updated to the extent possible but the same may vary. It is advisable to consult our local representative or check in a period manner for latest technical and other updates.
- The prices are subject to change without notice and those ruling at the time of supply will be charged.
- Colours &sizes of product images shown in the Website may vary in reality