ESSCO BY Jaquar GROUP

ORBIT



Orbit



ORB-CHR-105011B

Single Lever Basin Mixer

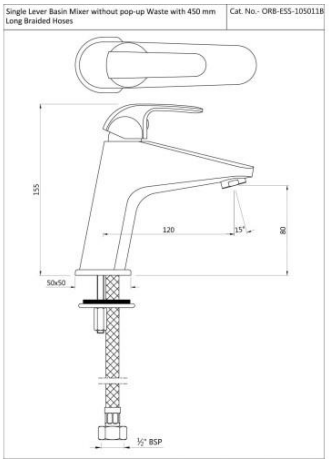



ORB-CHR-105219

Wall Mixer Non-Telephonic Shower Arrangement

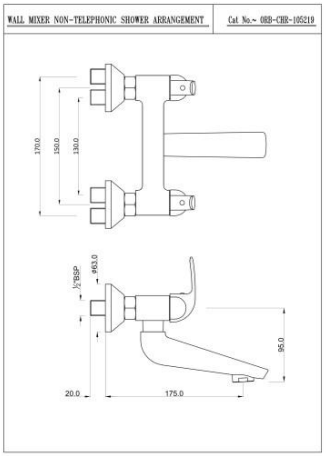



ORB-CHR-105051B

Single Lever Basin Mixer with Popup Waste

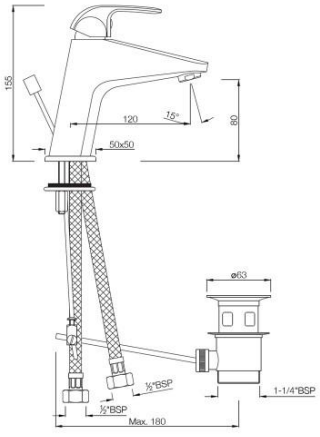

Orbit



ORB-CHR-105005B

Single Lever Tall Boy

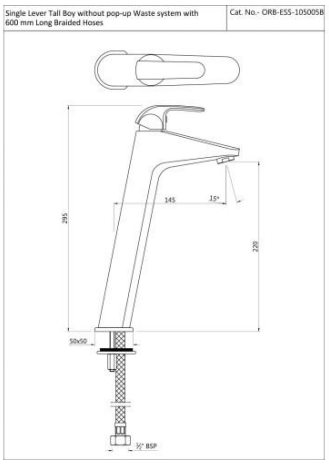



ORB-CHR-105055K

Exposed Parts Kit of Single Lever Diverter

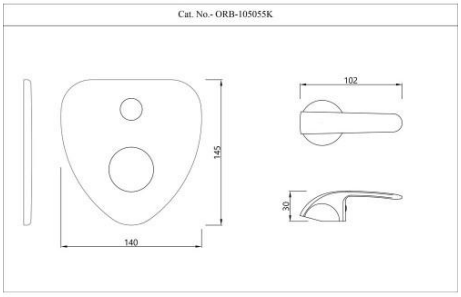

ORB-CHR-105233K



Exposed Part Kit of Single Lever Basin Mixer Wall Mounted

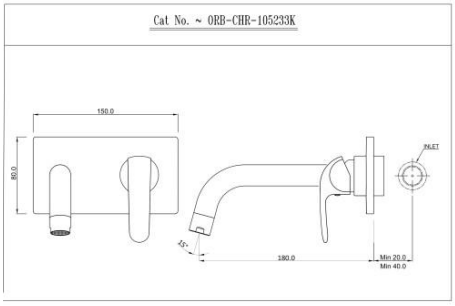

Orbit



ORB-CHR-105119

Single Lever Wall Mixer

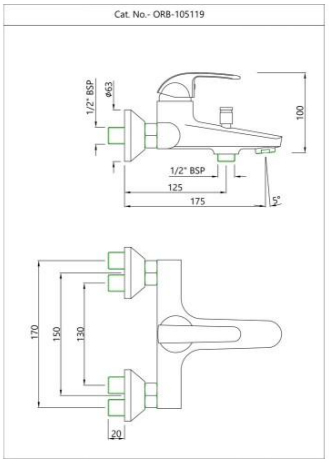



ORB-CHR-105149

Single Lever Exposed Shower Mixer

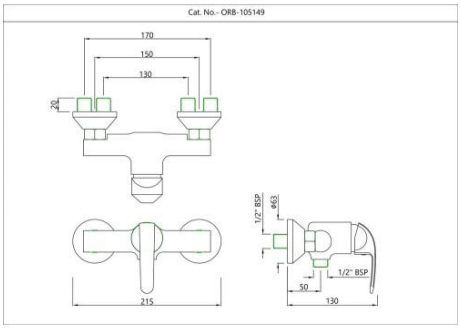



ORB-CHR-105213B

Single Lever 1-Hole Bidet Mixer

Orbit



ORB-CHR-105001N

Pillar Cock

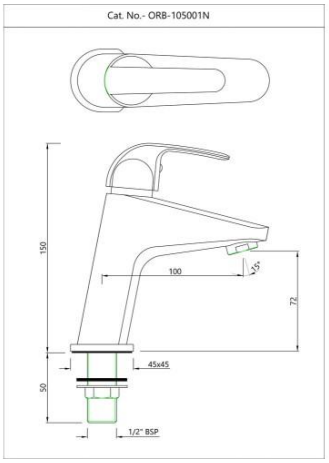



ORB-CHR-105021N

Pillar Cock

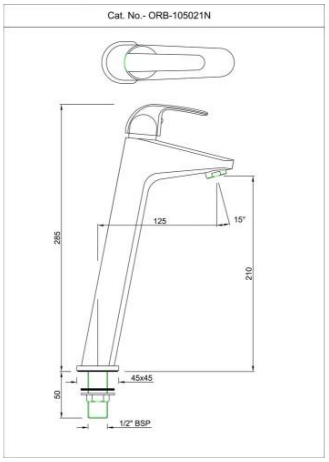



ORB-CHR-105123

Swan Neck Tap

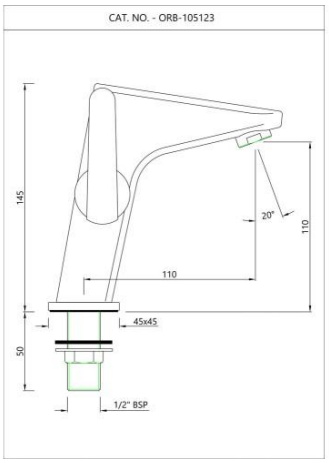



ORB-CHR-105127

Swan Neck Tap

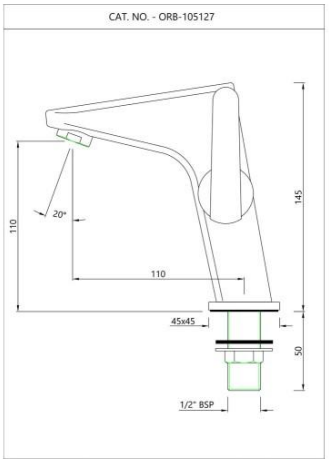



ORB-CHR-105273

Wall Mixer

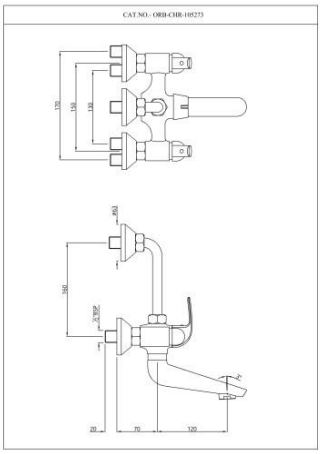



ORB-CHR-105281

Wall Mixer 3-in-1 System

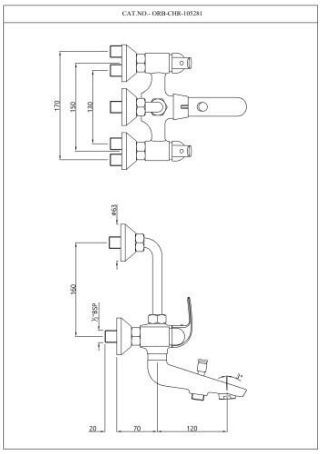

Orbit



ORB-CHR-105179B

Side Single Lever Sink Mixer

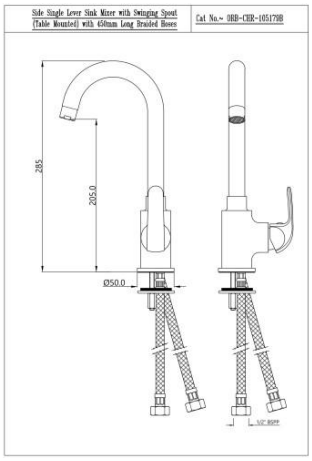



ORB-CHR-105309

Sink Mixer with Swinging Spout

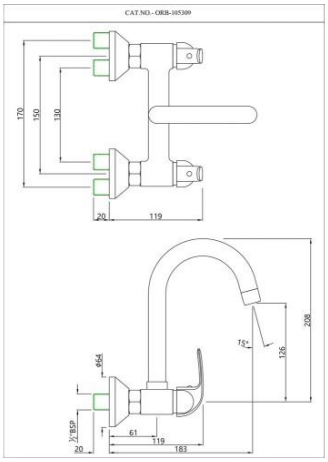



ORB-CHR-105347

Sink Cock with Swinging Spout

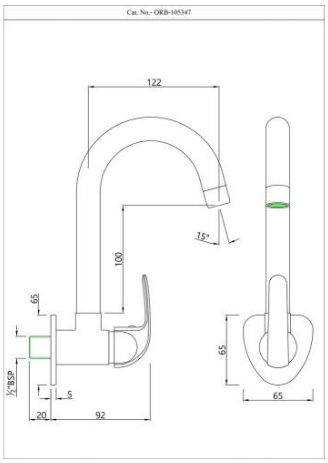

Orbit



ORB-CHR-105357

Sink Cock with Swinging Spout

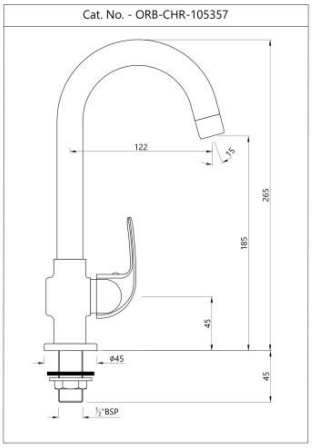



ORB-CHR-105037

Bib Cock

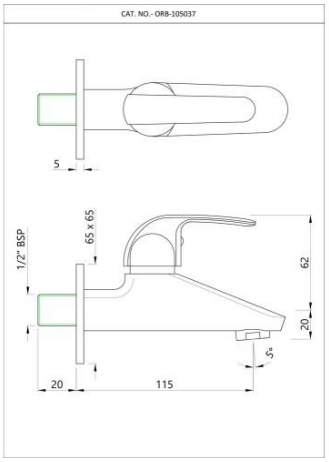



ORB-CHR-105041

2-Way Bib Cock

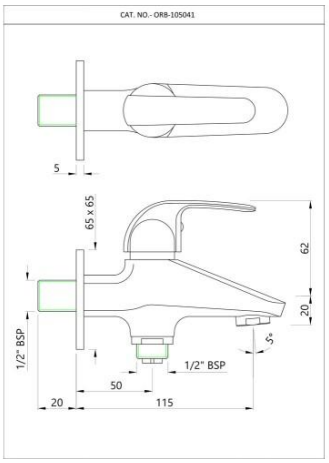



ORB-CHR-105107

Long Body Bib Cock

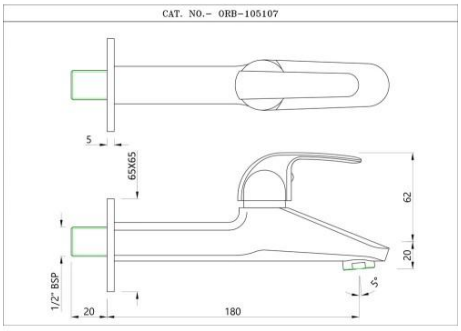



ORB-CHR-105053

Angular Stop Cock

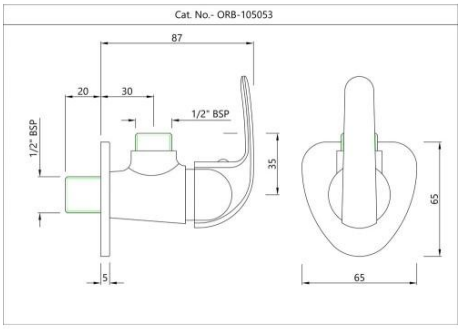



ORB-CHR-105067

2-Way Angular Stop Cock

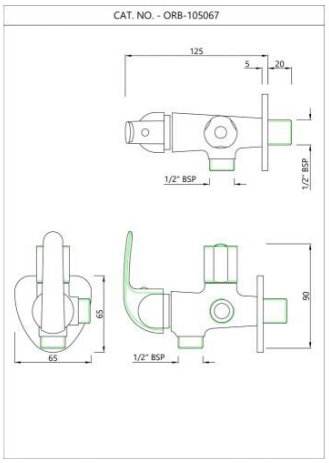



ORB-CHR-105057

Angular Stop Cock

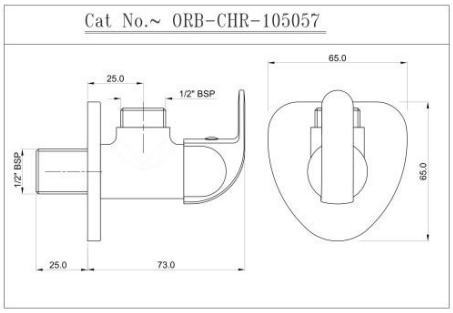



ORB-CHR-105069K

Exposed part kit of Concealed Stop Cock

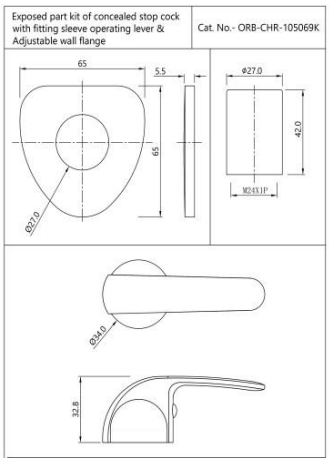



ORB-CHR-105081

Flush Cock

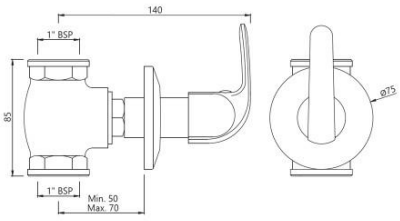

Orbit



SPE-CHR-105429

Orbit Bath Tub Spout

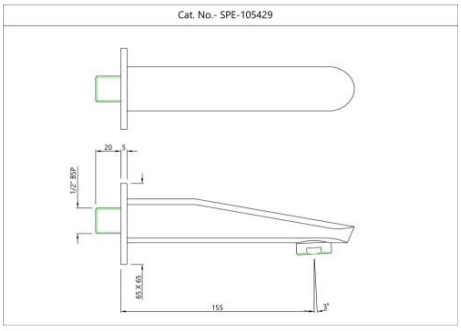



SPE-CHR-105463

Orbit Bath Tub Spout

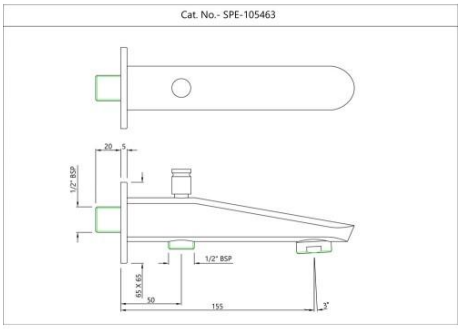

Disclaimer

- Jaquar reserves the right at its sole discretion, to change/modify/alter any product specification at any time without notice, where improvement can be effected in design, development and dimensions.
- Although the information shown in this catalogue is updated to the extent possible but the same may vary. It is advisable to consult our local representative or check in a period manner for latest technical and other updates.
- The prices are subject to change without notice and those ruling at the time of supply will be charged.
- Colours &sizes of product images shown in the Website may vary in reality