

AEC-CHR-1111N

Towel Rail 600mm Long

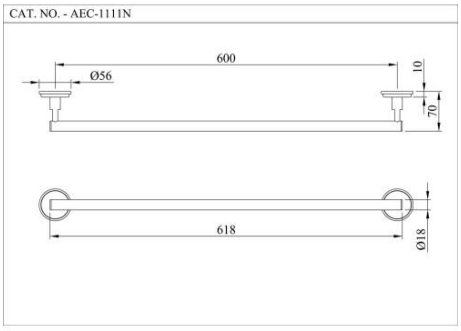



AEC-CHR-1111NB

Towel Rail 450mm Long

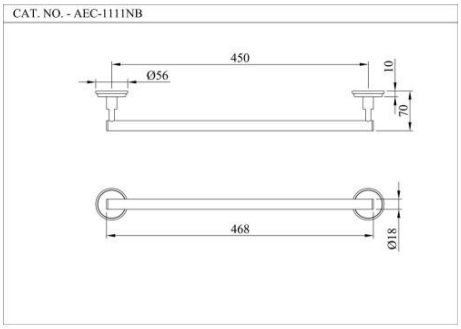



AEC-CHR-1121N

Towel Ring

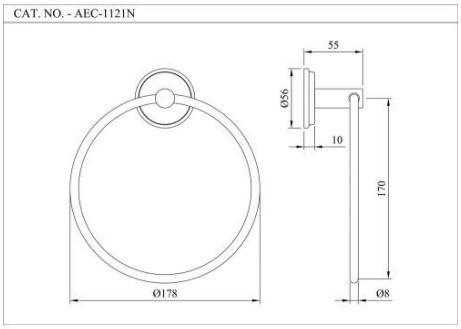



AEC-CHR-1131N

Soap Dish

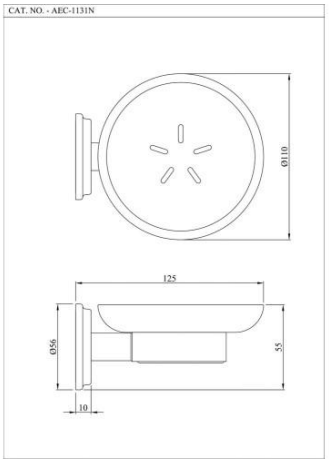



AEC-CHR-1133

Soap Dish

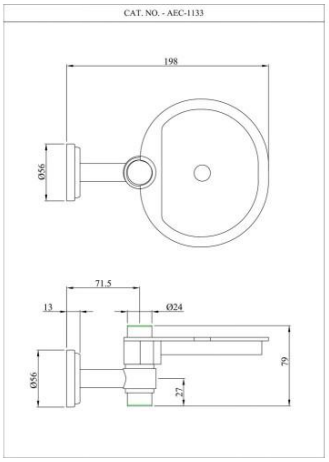



AEC-CHR-1141N

Tumbler Holder

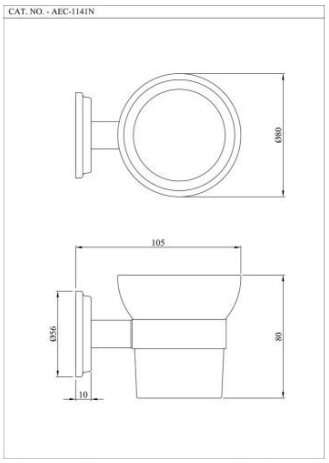

Bathroom Accessories



AEC-CHR-1151N

Toilet Paper Holder

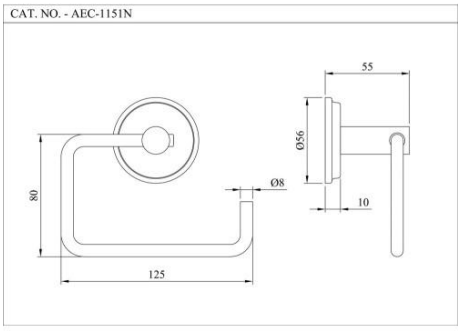



AEC-CHR-1161N

Double Coat Hook

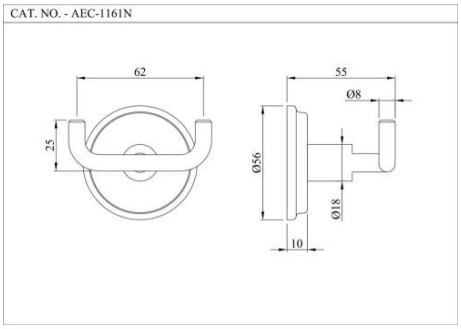



AEC-CHR-1181N

Towel Shelf 600 mm long

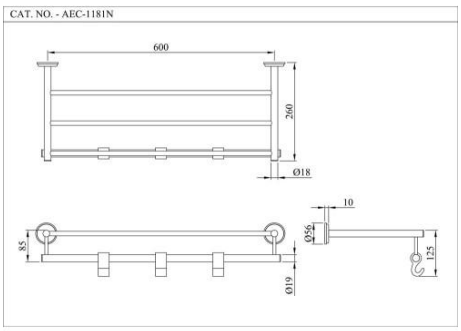

Bathroom Accessories



AEC-CHR-1181NA

Towel Shelf 450 mm long

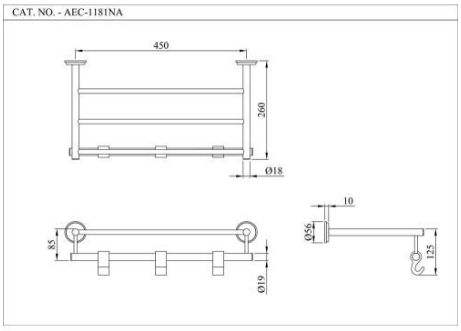



AEC-CHR-1191N

Single Robe Hook

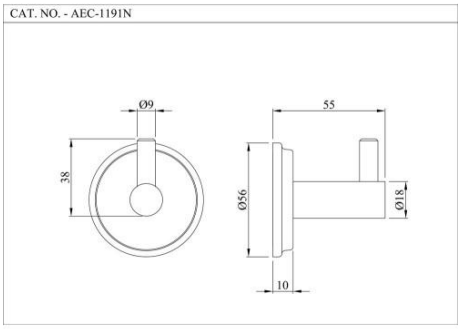

Disclaimer

- Jaquar reserves the right at its sole discretion, to change/modify/alter any product specification at any time without notice, where improvement can be effected in design, development and dimensions.
- Although the information shown in this catalogue is updated to the extent possible but the same may vary. It is advisable to consult our local representative or check in a period manner for latest technical and other updates.
- The prices are subject to change without notice and those ruling at the time of supply will be charged.
- Colours &sizes of product images shown in the Website may vary in reality